Document Title:	Function Group:	Information Type:	Date:
Basic check, transmission	**090**	**Service Information**	**03-11-2023**
Profile: **A45G FS Volvo**			

Basic check, transmission

Showing Selected Profile

Valid for serial numbers			
Model	**Production site**	**Serial number start**	**Serial number stop**
A45G FS Volvo			

Purpose of the basic check

The purpose of the basic check is to provide fast and accurate information about the general condition of the transmission.

The normal work procedure is to perform the basic check following collection of basic data, reading out error codes and checking parameters, if it has not been possible to determine the cause of the malfunction up to that point.

The basic check's tests should be run and evaluated according to instructions in Tech Tool.

Tests included in the basic check

The first step in the basic check is to operate the machine, to test-run the vehicle.

The basic check is then divided into the following tests, which should be performed in the order that they are listed, after **reading out error codes, checking parameters** and **operating (test-running)**the machine.

Tests:

1. **40012-3 Gear selector position sensor, test**
   The test is used to check that the selected gear position is correctly read in the control unit.
2. **40026-3 PWM-valves clutches and brakes, test**
   The test is used to check the PWM valves in the transmission control system.
3. **42002-3 PWM valve main oil pressure gearbox, test**
   The test is used to check the PWM valve that regulates main oil pressure to the transmission.

Document Title: **Basic checks**	Function Group: **090**	Information Type: **Service Information**	Date: **03-11-2023**
Profile: **A45G FS Volvo**			

Basic checks

Showing Selected Profile

Valid for serial numbers			
Model	**Production site**	**Serial number start**	**Serial number stop**
A45G FS Volvo			

The normal work order (see also Troubleshooting strategy) for troubleshooting is:

1. collection of basic data
2. Error code check and symptom troubleshooting
3. Tech Tool tests
4. Basic checks
5. Contact local product support

The basic checks are done before local product support is contacted, if the cause of the malfunction has not been deteremined before that.

The basic check(s) to be performed is determined by the information obtained when basic data was collected, see Collection of basic data.

Basic checks are done on each system. The purpose of the basic check is to give information about the condition of the specific system.

Each basic check is divided into a number of checks to be performed in order.

Basic checks:

- Engine, basic check
- Electrical system, basic check
- Power transmission, basic check
- Brake system, basic check
- Parking brake, basic check
- Steering and hydraulics, basic check

This is the sample of the manual if you need complete manual

Click Here to download

Document Title:	Function Group:	Information Type:	Date:
Tech Tool, operations	**090**	**Service Information**	**03-11-2023**
Profile: **A45G FS Volvo**			

Tech Tool, operations

Showing Selected Profile

Valid for serial numbers			
Model	**Production site**	**Serial number start**	**Serial number stop**
A45G FS Volvo			

Figure 1

Tech Tool

Tech Tool is a PC-based tool developed to make troubleshooting work easier. With Tech Tool operations, components/functions can be activated and error messages and values can be read out.

NOTE!
New operations are developed continuously. For a current list of operations, see Tech Tool.

Group	Operation no., Test
1. Service	Tech Tool, operations
2. Engine	Tech Tool, operations
3. Electrical system	Tech Tool, operations
4. Power transmission	Tech Tool, operations
5. Brakes	Tech Tool, operations
7. Suspension	Tech Tool, operations
8. Cab	Tech Tool, operations
9. Hydraulics	Tech Tool, operations

Document Title: **Collection of basic data**	Function Group: **090**	Information Type: **Service Information**	Date: **03-11-2023**
Profile: **A45G FS Volvo**			

Collection of basic data

Showing Selected Profile

Valid for serial numbers			
Model	**Production site**	**Serial number start**	**Serial number stop**
A45G FS Volvo			

The first step in all troubleshooting work is collection of basic data to quickly get a good picture of how the problem manifests itself.

In addition to information about machine and customer, it is important to get as much information as possible about events in connection with the occurrence of the malfunction.

The operator can often provide valuable information on the prevailing circumstances when the malfunction occurred since the operator is almost always the first to detect a problem. Often, the malfunction or perceived problems are difficult to recreate if the circumstances are not exactly the same. In these instances in particular, the information from the operator is vital to being able to make correct assessments when continuing troubleshooting.

Use the questions below to interview the operator. Note the responses to the questions and save them together with the work order.

General data

Note relevant general data such as:

- Customer information
- Dealer information
- The operator
- Machine specifications:
    - Machine model and serial number (PIN – Product Identification Number)
    - Machine hours

Problem description

- Describe the malfunction.
- Have any error codes been generated?
- Have any updates for software or hardware been done recently on the machine?
- Have any actions, e.g., calibration or repairs, been done to try to solve the problem?
- When did the malfunction occur?
- How was the malfunction detected and what happened just before it was noticed?
- Were there any other malfunctions at the same time or just before the problem occurred?
- Does the malfunction reappear?
- How often does the malfunction occur?
- How long does the malfunction last when it occurs?
- Under what operating conditions does the problem appear? Are there external conditions that have an impact?
- Does the operator have an idea of what may be the probable cause of the malfunction?
- Does the problem still exist?

Engine data

- Is the engine difficult to start?
- Is there abnormal smoke development?
- Are there abnormal engine sounds?
- Have changes in fuel consumption, oil consumption or power been confirmed?
- What type of fuel is used?
- Are additives used in the fuel? If yes, which ones?
- What repairs or other work has been performed on the engine?
- Other information?

Power transmission, data

- What type of oil is used?
- Are additives used in the oil? If yes, which ones?
- When was the last oil change?
- Are the tires of the same dimension?
- What repairs or other work has been performed on the transmission?
- Other information?

Brake system, data

- What type of oil is used?
- Are additives used in the oil? If yes, which ones?
- When was the last oil change?
- When was the last oil filter change?
- Is there abnormal heat generation from one or several wheels?
- What repairs or other work has been performed on the brake system?
- Other information?

Steering and hydraulics, data

- What type of oil is used?
- Are additives used in the oil? If yes, which ones?
- When was the last oil change?
- When was the last oil filter change?
- What repairs or other work has been performed on the steering system?
- Other information?

Document Title: **Troubleshooting, assistant devices**	Function Group: **090**	Information Type: **Service Information**	Date: **03-11-2023**
Profile: **A45G FS Volvo**			

Troubleshooting, assistant devices

Showing Selected Profile

Valid for serial numbers			
Model	**Production site**	**Serial number start**	**Serial number stop**
A45G FS Volvo			

To facilitate and make troubleshooting more effective there are a number of tools available, such as the service manual, the information display unit, and Tech Tool.

Service Manual
The service manual contains service information for troubleshooting, such as

- Troubleshooting strategy;
  How to perform effective and systematic troubleshooting; see Troubleshooting strategy
- Collection of basic data;
  The questions that the operator ought to be asked to determine the nature of the malfunction and the conditions under which it occurred. See Collection of basic data.
- Error code information;
  Display all error codes; see Error codes, showing.
- Parameters;
  Display of machine and customer parameters; see 35F9901 Parameter list.
- Basic checks;
  Each main system, e.g. engine or electrical system, undergoes a basic check. The aim is to quickly and securely gain information on the condition of the subsystems of the main systems. See Basic checks.

PROSIS diagnostics part
PROSIS diagnostics part can be used for troubleshooting with error codes.

Display unit
The information display unit can be used to read out error codes and warning displays, see Information display, general.

Tech Tool
Tech Tool is a PC-based tool developed to make troubleshooting work easier. With Tech Tool, components/functions can be activated and error messages and values can be read out.

Document Title: **Troubleshooting strategy**	Function Group: **090**	Information Type: **Service Information**	Date: **03-11-2023**
Profile: **A45G FS Volvo**			

Troubleshooting strategy

Showing Selected Profile

Valid for serial numbers			
Model	**Production site**	**Serial number start**	**Serial number stop**
A45G FS Volvo			

NOTE!
For all troubleshooting, follow the safety instructions in the relevant machines' Operator's Manuals and Service Manuals.

Figure 1

During all troubleshooting it is important to follow a strategy to be able to exclude failure causes, part by part.

Troubleshooting shall be performed in a number of predefined steps to be as effective as possible.

1. **Collection of basic data** – Questions that should be asked of the operator to determine the nature of the malfunction and the conditions under which it occurred, see Collection of basic data.
2. **Read out error codes** – Troubleshoot using error code information, see Error codes, showing and diagnostics part in PROSIS.
3. **Troubleshoot symptoms** – Check in PROSIS diagnostics part if relevant symptom troubleshooting is available. Troubleshoot using this information.
4. **Tech Tool** – Look for and perform relevant checks in Tech Tool, see Tech Tool, operations.
5. **Perform basic checks** – If there are no relevant error codes and there is no symtom troubleshooting, perform basic checks, see Basic checks.
6. **Product support** – Contact your local product support for information. Provide them with information from collection of basic data, basic checks, as well as any other test results.

In addition to these points, in PROSIS and in the Service Manual there are descriptions for components and functions, diagrams, as well as function checks that are to be used during troubleshooting.

VOLVO
Construction Equipment

Service Information

Document Title:	Function Group:	Information Type:	Date:
88830508 User instruction	**080**	**Service Information**	**03-11-2023**
Profile: **A45G FS Volvo**			

88830508 User instruction

Showing Selected Profile

Valid for serial numbers			
Model	**Production site**	**Serial number start**	**Serial number stop**
A45G FS Volvo			

Hydraulic safety jack 25 tonnes

Figure 1

NOTICE

Read the user instruction before use or in connection with initial use, pay special attention to the publication's warning texts.

General instructions

– These User Instructions are a direct guideline to using and maintaining the current lifting device in the right way.
– The User Instructions must be read carefully by affected personnel before the lifting device is used.
The user instructions must always be available to those who maintain or use the lifting device.

In addition, it is also important to:
- Save these user instructions and other applicable documents during the whole service life of the lifting equipment
- Pass these user instructions on to other owners or users of the lifting equipment.
- Introduce any appendices, supplements, or changes made by the manufacturer into the user instructions.

Pay close attention to the warnings mentioned in the user instructions and that are found on the lifting device. Serious injuries and equipment damage can occur if you fail to note and follow this information.

Responsibility

These user instructions describe the authorized method for using the lifting device.
All service must be performed by personnel with suitable technical training or corresponding professional experience and in consultation with the manufacturer.
The manufacturer is not liable for any injuries or equipment damage if the User Instructions are not followed.

Marking

The lifting device has a CE-marking, which means that it is designed, manufactured, and described according to EC:s Machine Directive 2006/42/EC.
Machine plates or any other markings may not be removed or made illegible.

Figure 2

BM Lindahl AB Älmedal 6 SE-364 33 Åseda
Hydraulic safety jack x2 Type/No.: 25 tonnes x2 Year: 2016 Max. load 50 tonnes with two jacks

Manufacturer

BM Lindahl AB
Älmedal 6
SE-364 33 Åseda

When modifying

The CE marking does not cover any modifications or other parts that are added to the lifting device without permission from the manufacturer.
If such modifications or parts change the function of the lifting device the CE marking does not apply.
In the event of modification, it is important that these user instructions are immediately supplemented/adjusted with the necessary illustrations, photographs and text.

Intended use of jacks

The jacks are designed to be used for lifting articulated haulers of a maximum weight of 50 tonnes, in indoor industrial environments at normal temperatures.
Flooring for use must be flat, void of holes and have the strength class to bear the weight.
The jacks are intended for use by specially appointed and trained personnel. They are not intended for use by unauthorized personnel or under-age personnel.

General

To meet the requirements for the intended use, the user must comply with all operating and maintenance instructions prescribed by the manufacturer.

Technical data safety jack

Type designation: Safety jack 25 tonnes.
Max. load: 25 t, 25000 kg.
Dead weight: 150 kg.
Test factor for statistics test: 1,2.
Lift in rear axle of articulated hauler A60H, with a full load in the load body, with a total weight of approx. 90 tonnes, of which 2/3 on the rear axle.
See also Validation- Inspection report lifting equipment

Safety information, usage restrictions

The lifting device may only be used for the intended purpose. All other use is forbidden.

Machine description

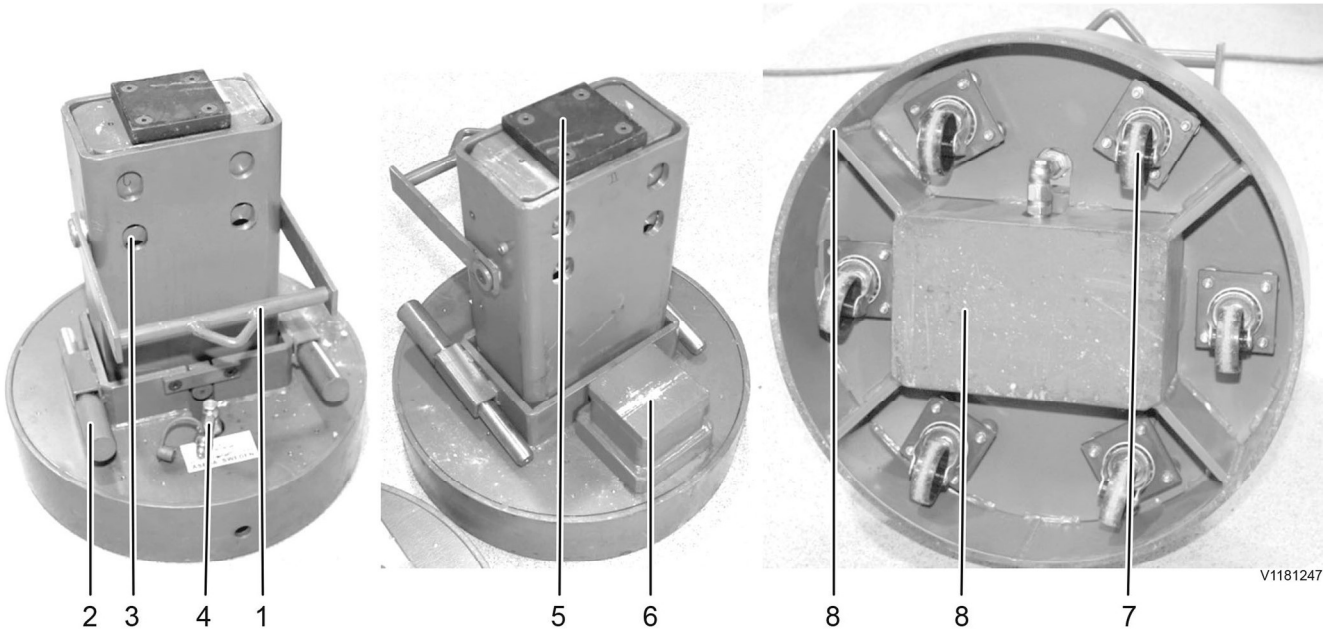

Figure 3

1. Handle for manual handling and when lifting the jack.
2. Pin (x2) for securing lifted load.
3. Hole for engaging pins to secure raised loads.
4. Quick connection nipple for connection of hydraulic hose.
5. Inner stiletto beam with top plate, for guiding and securing the top cover.
6. Top cover, connected before lift. Lifting height increases by about 100 mm.
7. Sprung caster (x6) for easy manual movement of the jack.
8. Support surfaces - during loading the casters spring in and the jack rests on its support surfaces.

Hydraulic connection

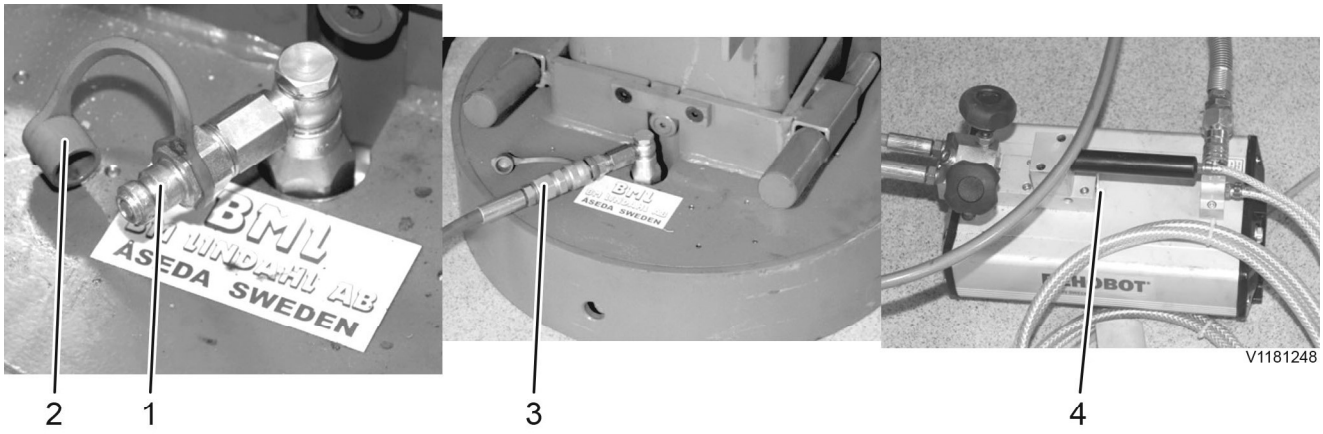

Figure 4

1. Nipple for connection of hydraulic hose.
2. Protective cover for nipple.
3. Hydraulic hose with quick-coupling connected to jack.
4. Hydraulic pump for lifting and lowering load.

Hydraulic connection/installation

CAUTION

Hydraulic connection via quick-coupling. When hydraulic energy is pressurized, sudden movements can occur, check that no-one is in any danger zone during pressurization.

NOTICE

The manufacturer's/supplier's instructions on safety and handling must be followed when handling hydraulic oils.
Always use the recommended hydraulic oils in the system, always perform filter replacements and oil changes according to the manufacturer's/supplier's instructions.

Requirements on flooring during use

The building's flooring for the use of jacks must be smooth, void of holes and be of such quality that it can carry the jacks with a total load of 25 tonnes.

Before lifting

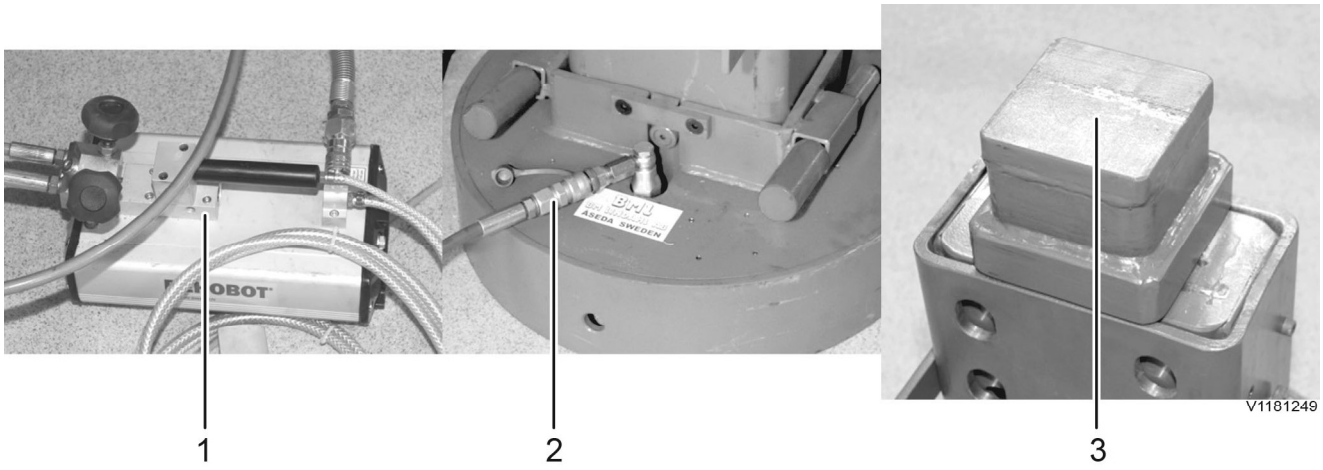

Figure 5

1. Prepare and place the hydraulic pump outside the danger zone of the lift.
2. Connect the hydraulic hose to the respective jack via quick-coupling.
3. Place the top cover on the respective jack if necessary before lifting.

Lifting loads

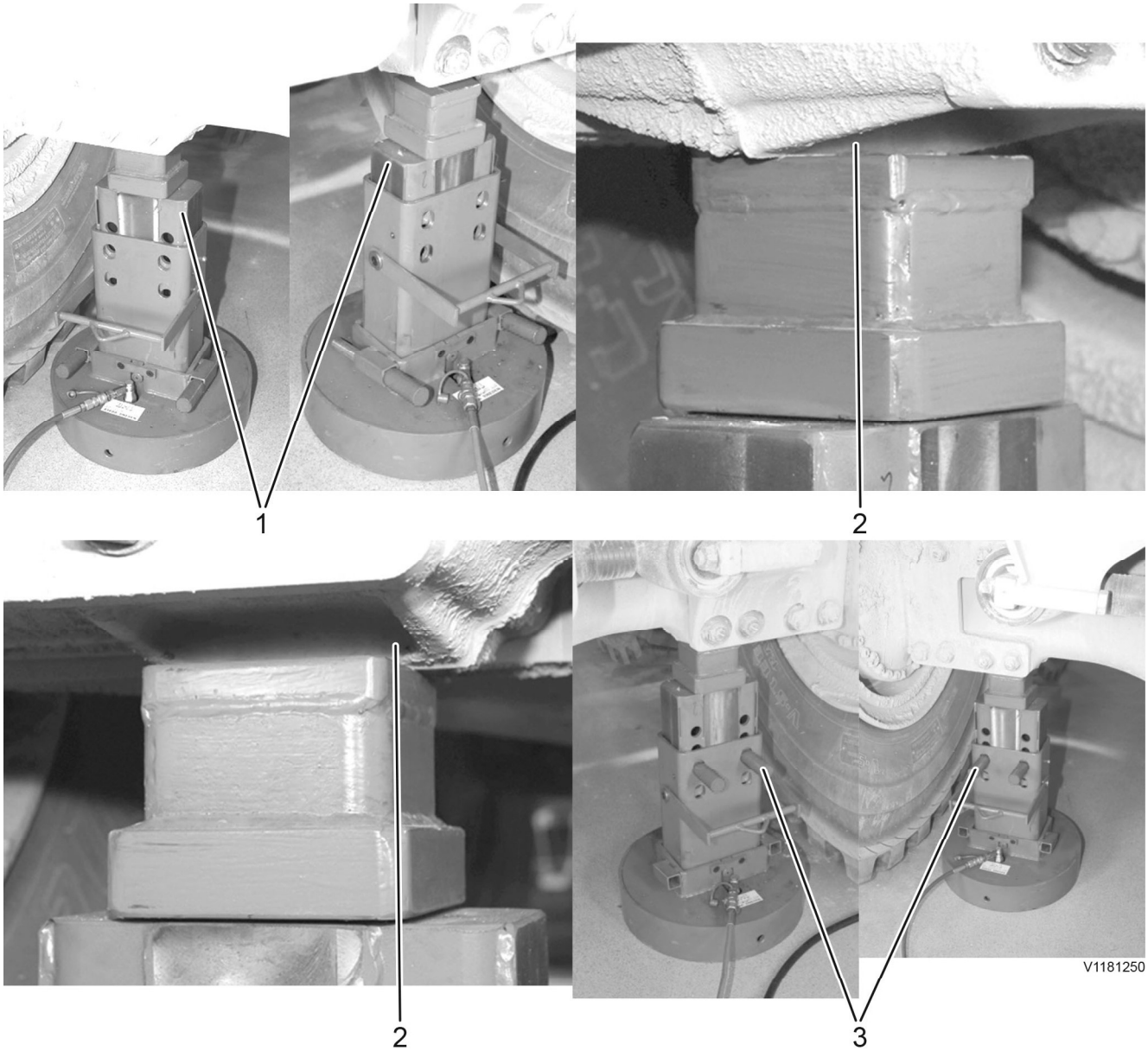

Figure 6

1. Place the jacks under the machine at the designated locations, raise the jacks until they touch the machine beams.
2. Check that the top covers are centred under the machine's beams.
3. Lift the machine to the desired height and secure the lift with pins x4. Lower the jacks so that they rest on the pins. Disconnect the hydraulic pump via the quick-couplings and perform the required work.

Lowering loads

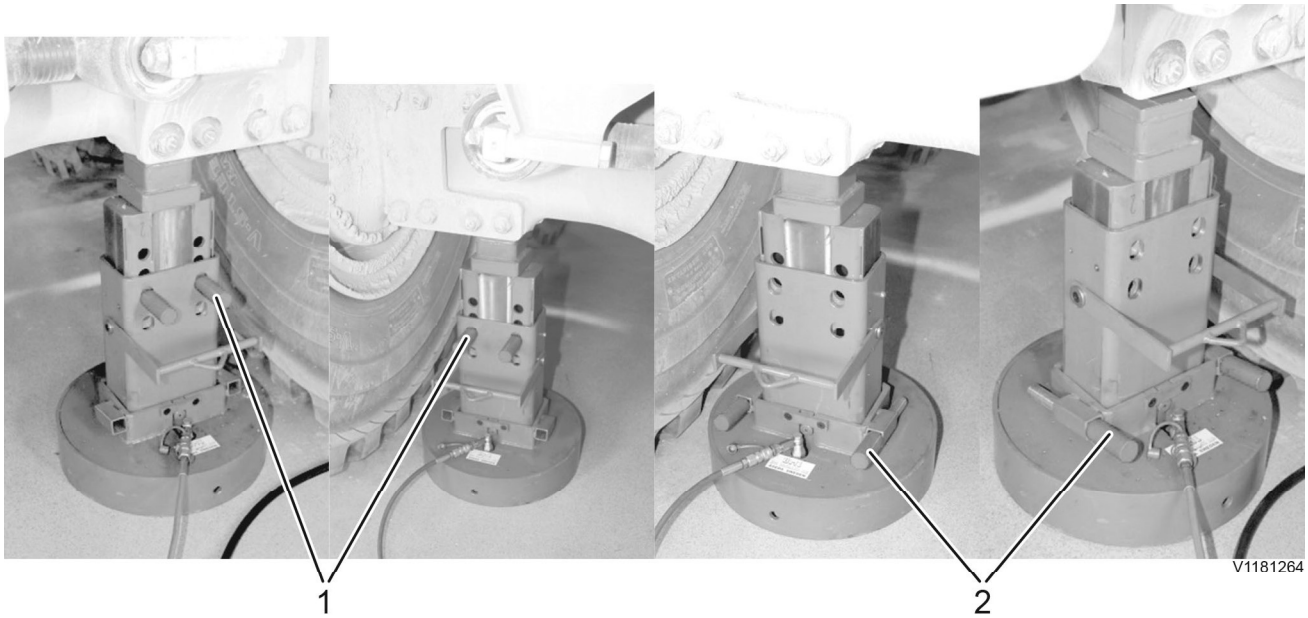

Figure 7

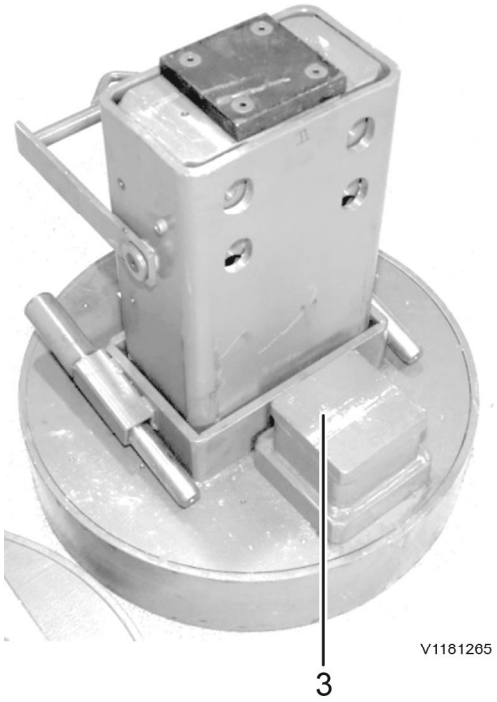

Figure 8

1. Before lowering the load, connect the hydraulic pump via the quick-coupling to the respective jack, lift carefully to relieve the load from the pins.
2. Remove the pins and place them in their storage locations, lower the load and jacks to their lower end-position, pull out the respective jack from the machine.
3. Remove the top covers and place them in their storage locations, place the jacks in their storage locations.

This is the sample of the manual if you need complete manual

Click Here to download

WARNING

Trapping risk
Never put your fingers in pin holes, in the event of unexpected movement there is a risk of trapping and injuring your fingers.

NOTICE

Storing pins
The pins must always be stored in their holders so that they are constantly available for use to secure the load.

Conditions of use
The jacks may not be used on inclined surfaces, only use on flat surfaces/flooring.
The surface/flooring must be strong enough to support the jacks with the applied weight.

Conditions and preparatory measures
Lifting equipment with damaged parts must not be used.
Warning decals as well as CE markings on lifting equipment must be clearly visible.
If any part with a warning decal or CE marking is replaced, new warning decals and CE marking must be attached in the corresponding location.
Damaged parts and CE markings must be replaced immediately,

Ongoing maintenance and inspection
Lifting equipment must be continuously inspected.
The following points must be checked at the following intervals:

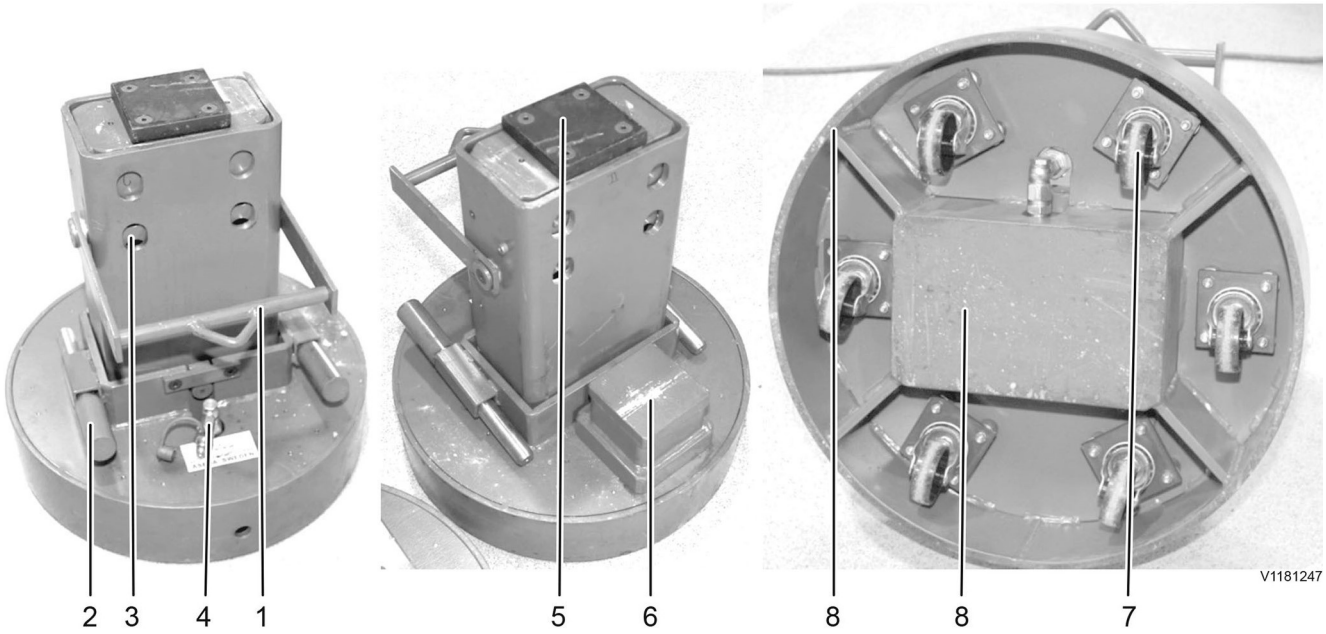

Figure 9

No.	Part	Check/inspection	Interval
1	Handle	Inspection not necessary	Replaced as necessary
2	Pin x2	Visual check of condition and for damage	Before each lift
3	Hole x4	Visual check of condition and	Before each lift

		for damage	
4	Quick coupler	Check that the coupling is free from dirt, gravel etc. Wipe dirty coupling with fabric cloth.	Before each connection
5	Inner stiletto beam	Lubricate with grease	1 x annually or as necessary
6	Top cover	Visual check of condition and for damage	Before each lift
7	Casters x6	Inspection not necessary	Replaced as necessary
8	Support surfaces	Visual check of condition and for damage	1 x per month

Declaration of Conformity

EG-FÖRSÄKRAN OM MASKINENS ÖVERENSSTÄMMELSE

Original

Direktiv 2006/42/EG, Bilaga II 1A

Tillverkare (och i förekommande fall dennes befullmäktigade representant):

Företag:	BM Lindahl AB
Adress:	Älmedal 6 | SE-364 33 Åseda

Försäkrar att:

Maskintyp:	25 tons domkraft
Maskinnr:	88830508

Överensstämmer med maskindirektivet 2006/42/EG.

Överensstämmer även med följande direktiv:

Följande harmoniserade standarder har tillämpats:

Följande andra standarder och specifikationer har tillämpats:

Behörig att sammanställa teknisk dokumentation:

Namn:	Kalle Lindahl | 0474-10510 | 0708-754914 | kalle@bmlindahl.se
Adress:	Älmedal 6 | SE-364 33 Åseda

Signatur:

Ort/Datum:

Namn:

Figure 10

Document Title:	Function Group:	Information Type:	Date:
88830386 User instruction	**080**	**Service Information**	**03-11-2023**
Profile: **A45G FS Volvo**			

88830386 User instruction

Showing Selected Profile

Valid for serial numbers			
Model	**Production site**	**Serial number start**	**Serial number stop**
A45G FS Volvo			

88830386 Pump is adapted for venting the fuel system. With 88830386 Pump air in the fuel system is removed in a quick and effective way, and therefore it is advantageous to use it to replace manual air bleeding via the hand pump on the filter housing. The pump can be used when replacing fuel filter and other work in the fuel system where air bleeding is needed.

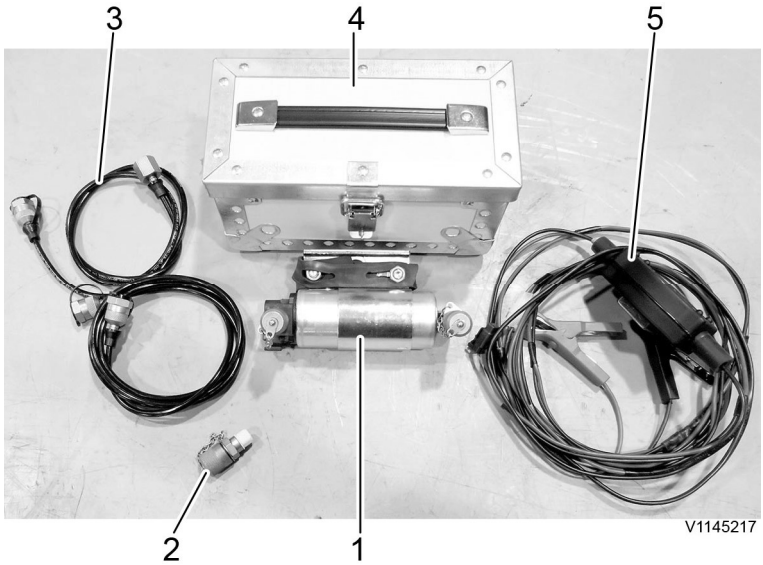

Figure 1
88830386Pump

1. Breather pump (priming pump)
2. 936442 Testing nipple, included in pump kit
3. 2 pcs. fuel hose 1 m (39 in)
4. Storage case
5. Battery cables with switch

Op nbr

1. Remove the breather nipple for the cylinder head's fuel channel and install 936442 Testing nipple supplied in the pump kit. See Fuel system, component location for position.

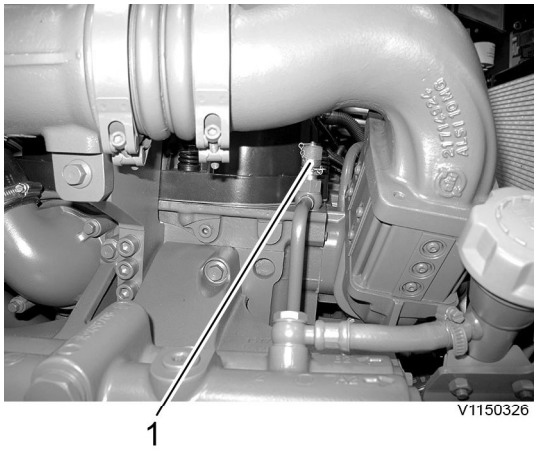

Figure 2
Example figure, shows A35G

1. 936442 Testing nipple, installed on fuel channel from cylinder head

2. Install the breather pump in a suitable location.

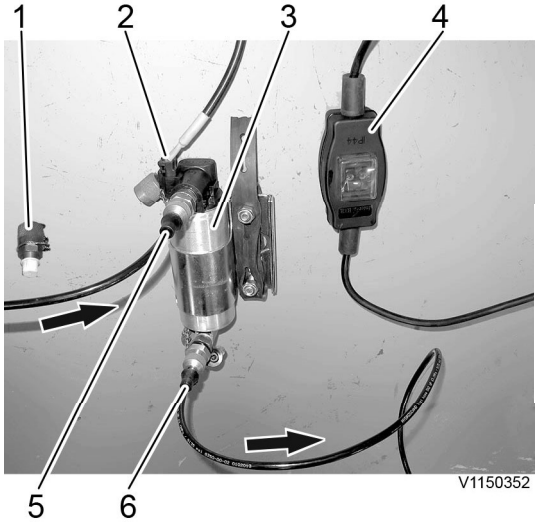

Figure 3
Connecting breather pump, general overview[T1]

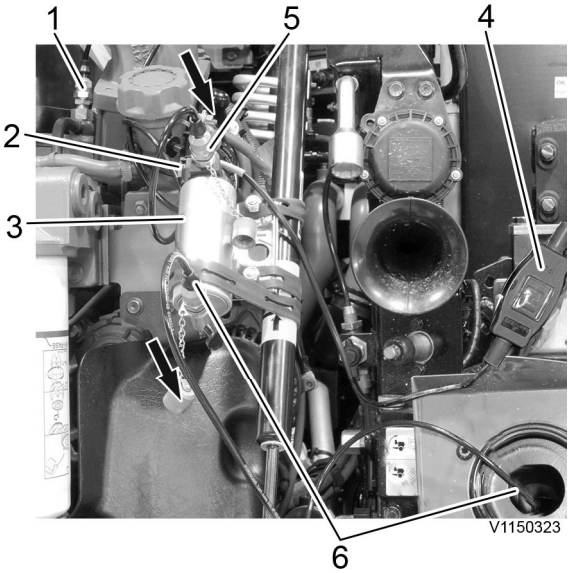

Figure 4
Example figure, shows A35G. The breather pump is installed on the gas spring for the front.

1. Nipple 936442 to connect to fuel channel from the cylinder head
2. Connector for battery cable
3. Priming pump
4. Switch
5. Inlet connection from fuel channel
6. Outlet connection to tank

[T1] The pump is marked with inlet and outlet for fuel

3. Connect a fuel line between 936442 Testing nipple and the inlet connection on the breather pump.
   NOTE!
   It is important to obtain a completely tight seal at the connections so that the fuel can be sucked up from the tank and through the whole engine's fuel system.

4. For older machines the pump can be connected the fuel system's return line that goes to the tank. For diagram, see Fuel system, description
   NOTE!
   It is important to obtain a completely tight seal at the connections so that the fuel can be sucked up from the tank and through the whole engine's fuel system.

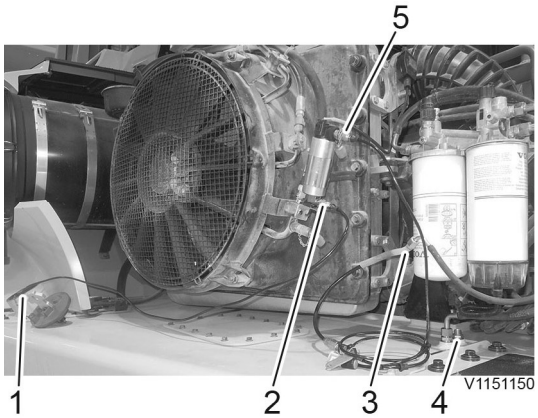

Figure 5
Example figure

1. Fill pipe, fuel tank
2. Outlet connection from pump to fuel tank
3. Inlet fuel line to pump and fuel system's return hose, connected with suitable rubber hose
4. Connection for fuel system's return hose to tank
5. Inlet connection to pump

5. Connect a fuel line to the outlet connection on the breather pump and place the other end in the fill pipe on the tank.

6. Connect the battery cables to the battery on the machine. Red clamp to the positive (plus) connection and black clamp to the negative (minus) connection. Plug in the connector for the breather pump.

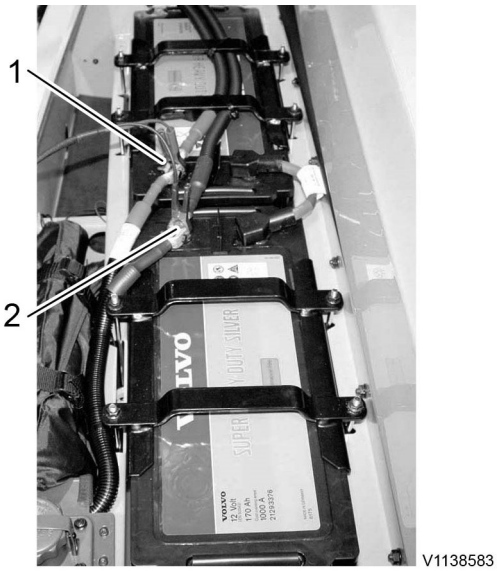

Figure 6
Example figure, shows A35G

1. Positive connection (red)
2. Negative connection (black)

7. Start the breather pump with the switch and let the pump run until fuel flows with a constant and even jet from the fuel line, which takes approx. 5 minutes.
   NOTE!
   For faster air bleeding, the breather pump can be supplemented with the hand pump at start.

8. Turn off the breather pump with the switch and remove the equipment. Reinstall the tank cap and the breather nipple.

9. Start the engine and let it idle for a few minutes before it is loaded.

Document Title:	Function Group:	Information Type:	Date:
88830384 User instruction	**080**	**Service Information**	**03-11-2023**
Profile: **A45G FS Volvo**			

88830384 User instruction

Showing Selected Profile

Valid for serial numbers			
Model	**Production site**	**Serial number start**	**Serial number stop**
A45G FS Volvo			

Cab Dropbox special tool

General information

This instruction is a guide on how to use and maintain the lifting tools correctly. The instructions shall be studied carefully by the personnel concerned before the lifting tools can be put into use.
The instructions shall always be available to the personnel maintaining and using the lifting tools daily.

NOTE!

Pay careful attention to information about warnings mentioned in the instructions and found on the warning signs on the lifting tools. Severe personal injuries and equipment damage can arise if you fail to observe this information.

- Keep the instructions and other applicable documents during the entire lifetime of the lifting tools.
- Pass the instructions to other owners or users of the lifting tools.
- Update the instructions with additions or changes made by the manufacturer.

Responsibility

The instructions describe the authorized method to use the lifting tools.
All service shall be performed by personnel with adequate technical training or corresponding professional experience and in consultation with the manufacturer.
The manufacturer is not responsible for personal injuries or damage to equipment if the instructions have not been followed.

Marking

The lifting tools are marked with a CE mark, which means that they are designed, manufactured and described in accordance with EC Machinery Directive 2006/42/EC.

Manufacturer

Company:
Volvo Construction Equipment AB
Address:
Technology platform CE-42912 Carl Linells väg 360 42 Braås Sweden

Rebuilding

If the lifting tools are rebuilt or supplemented with other parts without permission by the manufacturer, the CE marking is not valid for these parts. If such rebuilding or added parts change the function of the lifting tools, the CE marking as a whole is no longer valid.

Intended usage

The lifting tools covered by this document are only intended for lifting Cab-dropbox IL1, IL2 and IL3. To fulfil the requirements for intended use the user shall follow all instructions and maintenance directions written by the manufacturer.

Technical data

Type designation: cab-dropbox lifting tool
Maximum load:
550kg/ tool
Weight:
Stand 88830384: 17 kg
Test factor for static testing (for lifting tools): 1.5

Product description

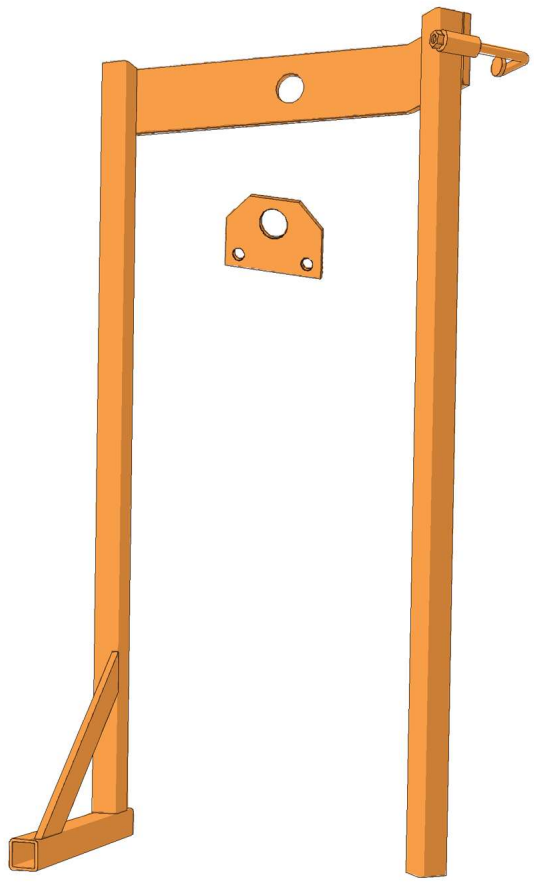

V1190133

Figure 1
Stand and Yoke bracket

Limits of use

The lifting tools may only be used for the intended purpose. All other use is forbidden.

Safety information

WARNING

Risk of personal injury!

Maximum weight of a dropbox is 550kg.

WARNING

Do not work under a hanging or suspended load!

Lifting tools with damaged parts must not be used.
The lifting device to be used shall have sufficient lifting capacity and the lift hook shall be equipped with a hook lock. Lifting tool must be able to lift dropbox IL1, IL2 and IL3. For safety, do not exceed maximum static load.

Warning decals and CE mark on lifting tools shall be clearly visible. If a part provided with warning decals or CE mark is changed, a new warning decal and CE mark shall be mounted in the same place. Defective decals and CE marks shall be replaced immediately.

Usage and description of the geometry

See also included lifting tool parts.

Lifting the dropbox

1. Fit the lifting tools on dropbox IL1, IL2 or IL3 using 2 bolts M16 bolts. See figure 4.
2. The yoke bracket shall be placed in the back edge of the bracket. See figure 4.
3. Ensure that lifting tools are fixed properly.
4. Place stand 88830384 on the cab floor above the opening for the dropbox. Put the stand against and around the door frame and make sure it's fixed properly. See figure 5.
5. Ensure that the lever block and included equipment are designed to handle the maximum weight.
6. Mount a lever block with a chain at the stand.
7. Mount the hook properly at the yoke bracket.
8. Ensure that the lever block and is fixed properly.

Figure 2
Geometry description

Table 1

Part number	Part name

1.	Lever block (not included)
2.	2 x M16 bolts (not included)
3.	Yoke bracket
4.	Dropbox (IL1, IL2 (360kg), IL3 (550kg))
5.	Stand 88830384

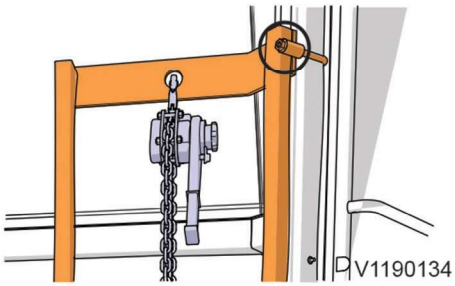

Figure 3
Mounting with a lever block

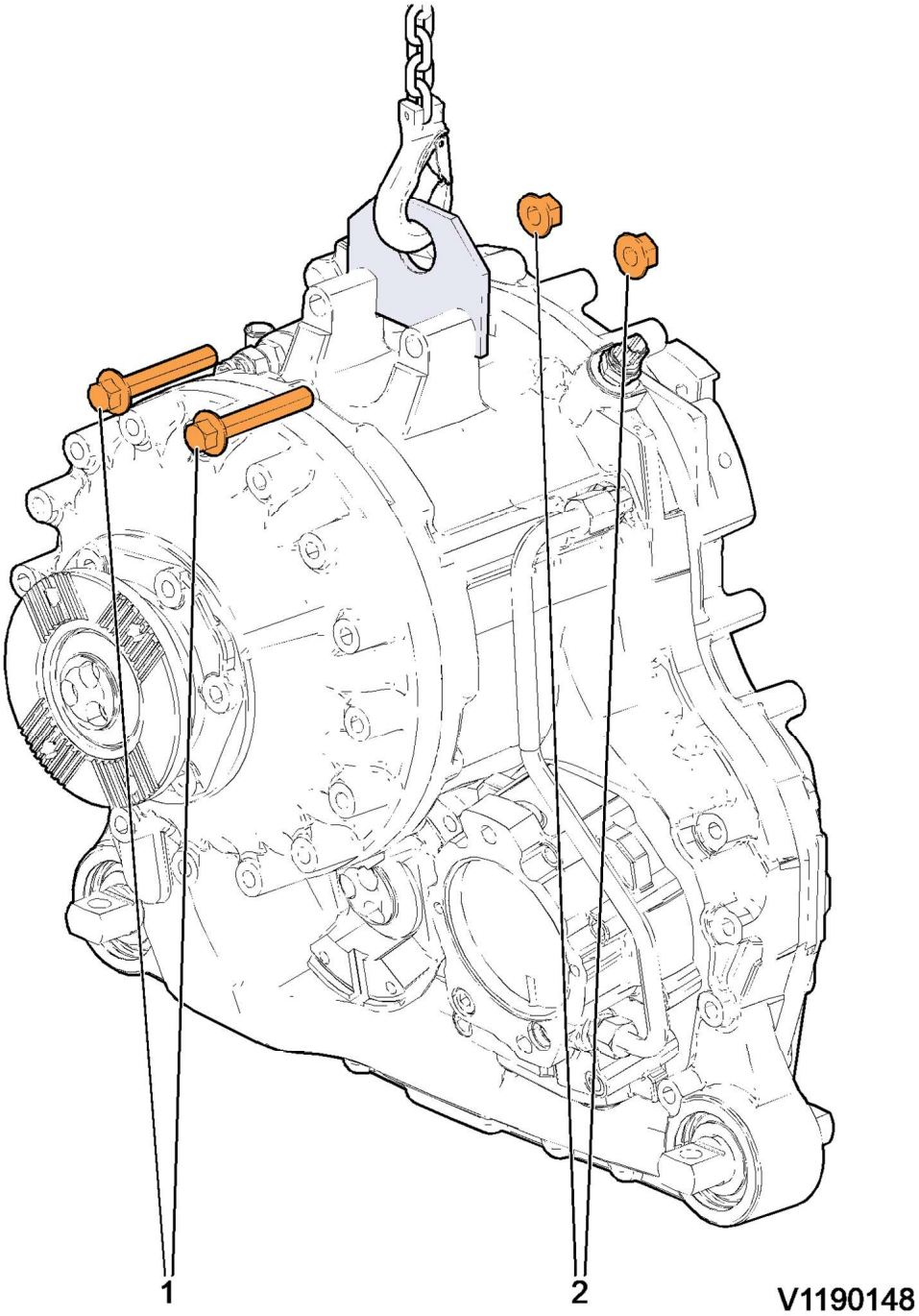

Figure 4
Yoke bracket mount

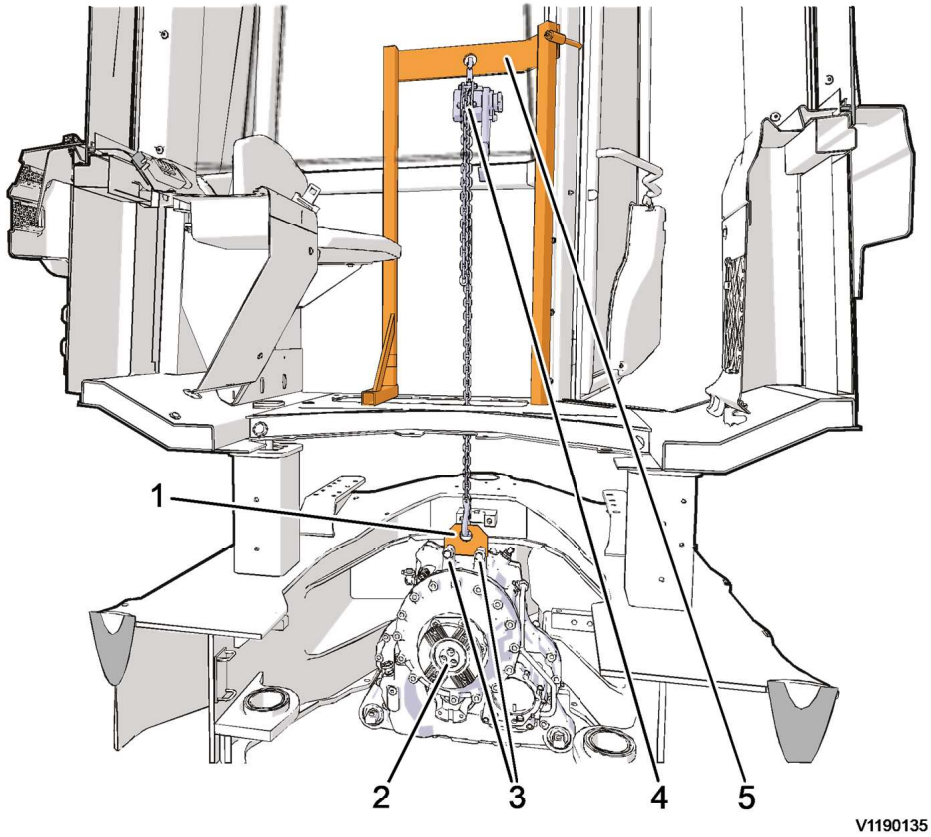

Figure 5

Material data, analysis criteria, DQI and targets

Material properties

For VSS390+N: *Elasticity E*=210000MPa

Material	*R P0.2 [MPa]*	*R M [MPa]*	*Thickness [mm]*	*A5[%]*
VSS390+N (SS2142-01)	390	490-650	0-16	20

*R*P0.2=Yield strength.
*R*M= Ultimate strength.
A5=Elongation at break.

Allowable stresses

all = *R*P0.2 = Allowable stress for static loads.

Maintenance

General

Defective lifting tools shall be replaced by new ones.

Continuous supervision

Check if cracks have appeared before mounting the lifting tools.
Check if the stand is bent.
Perform lifting tool tests, lift with 1,5x550kg = 825kg.

Document Title:	Function Group:	Information Type:	Date:
88830268 User Instruction	**080**	**Service Information**	**03-11-2023**
Profile: **A45G FS Volvo**			

88830268 User Instruction

Showing Selected Profile

Valid for serial numbers			
Model	**Production site**	**Serial number start**	**Serial number stop**
A45G FS Volvo			

88830268 Pump
The pump is adapted for draining and filling the oils used in the machine.

The pump must not be used for coolant or AdBlue®/DEF.

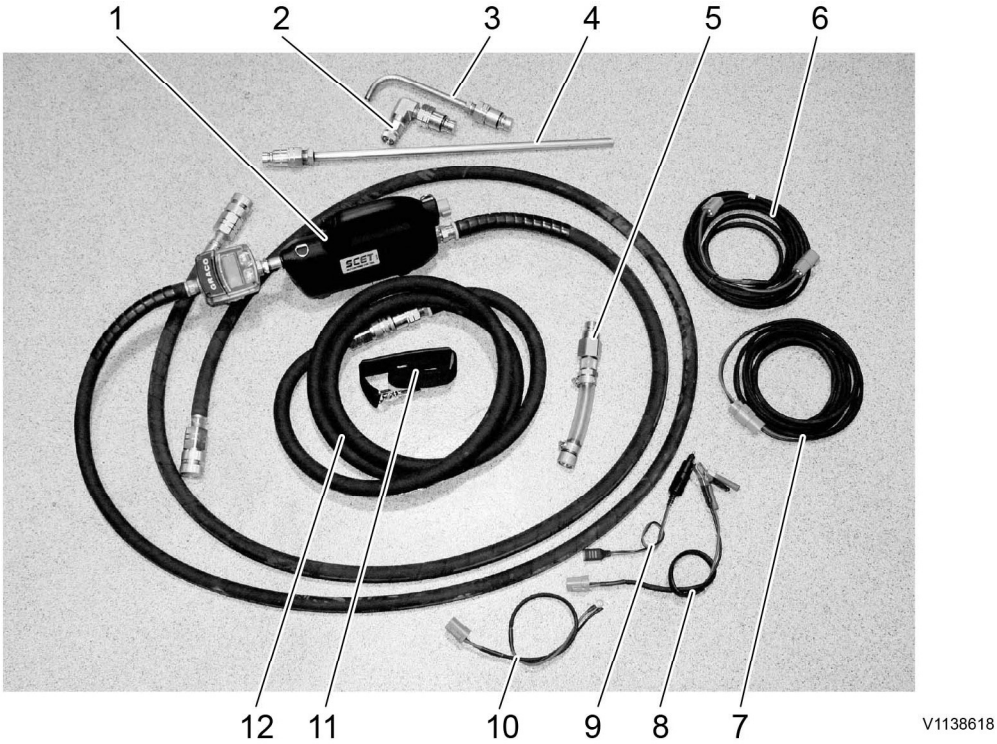

Figure 1

Content

1	Pump with flow meter and hose 2x2 metres (79 in)	7	Extension cable, 6 metres (236 in)
2	Adapter, angle 90°	8	Power adapter, battery
3	Fill pipe (axles)	9	Power adapter, 12 V/24V-outlet

This is the sample of the manual if you need complete manual

Click Here to download